WEEK ONE!

Tiffany Marcus

ABOUT ME!

I am going into my senior year at UCF as a computer science major!

I've been on the UCF competitive programming team for two years!

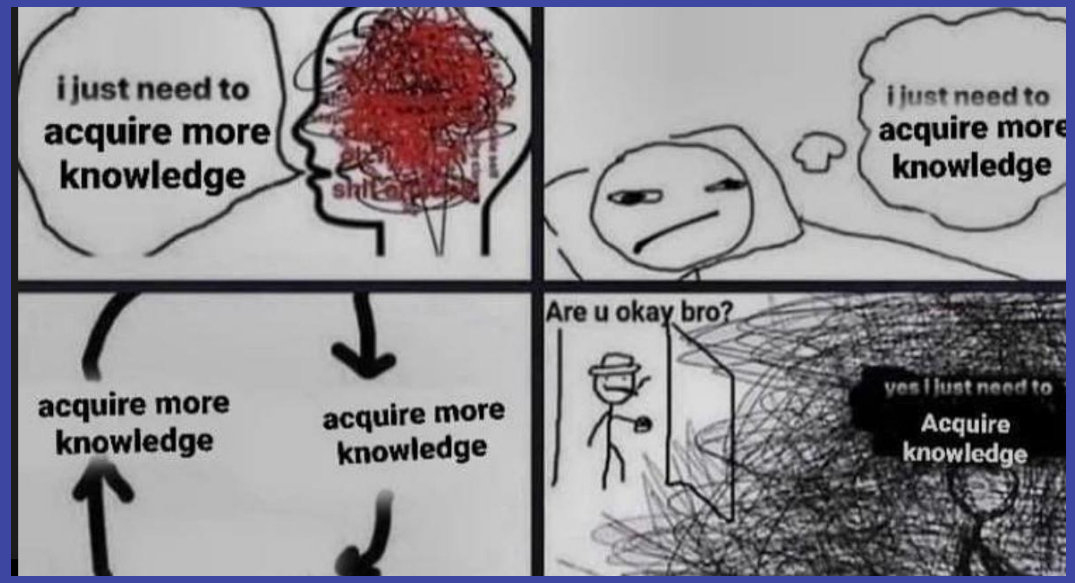

I LOVE LEARNING !!!!!!!!!!



My cat, Toby!

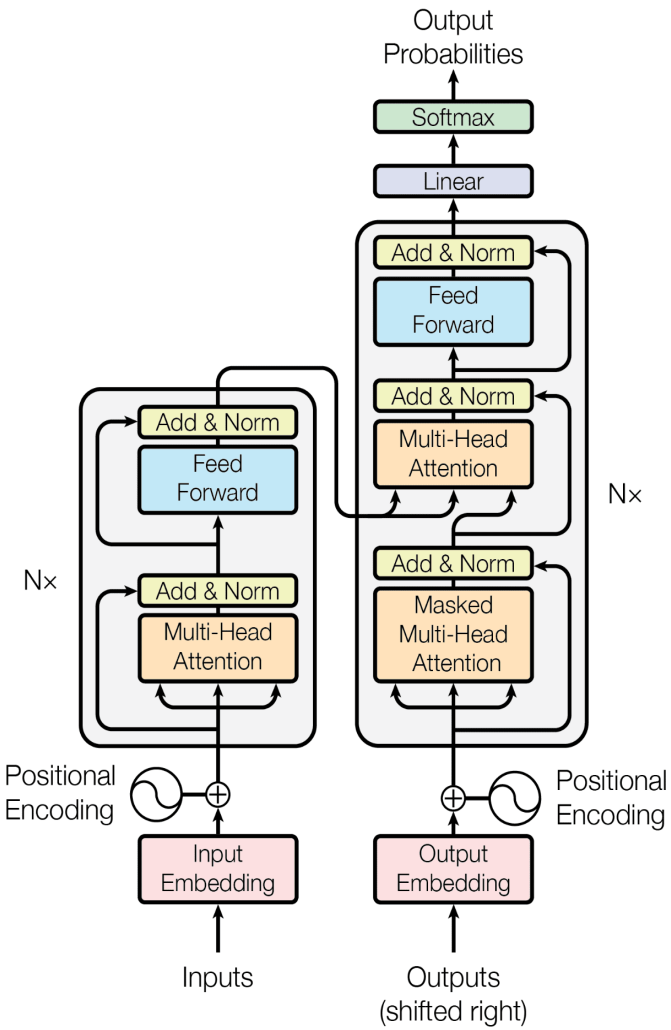

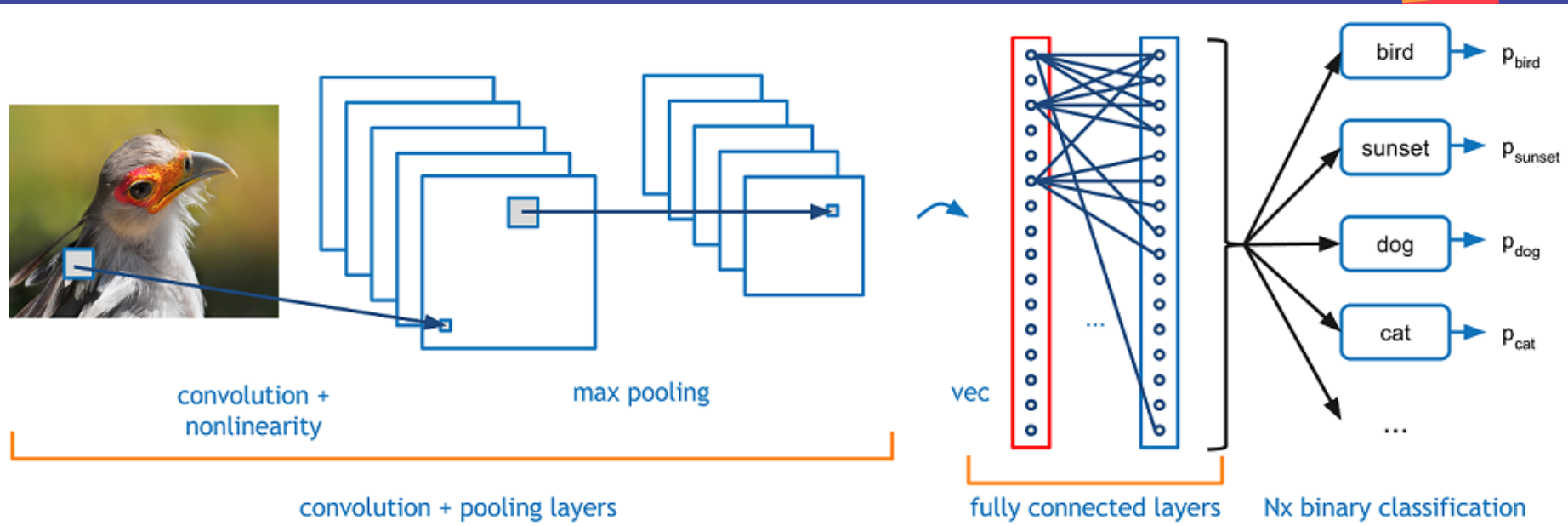

CNNs and Transformers



ASSIGNMENT ONE !

```
— platypus —
  1. platypus, duckbill, duckbilled platypus, duck-billed platypus, Ornithorhynchus anatinus  99.98%
  2. echidna, spiny anteater, anteater                                                         0.00%
  3. beaver                                                                                    0.00%

— squirrel —
  1. fox squirrel, eastern fox squirrel, Sciurus niger                                        79.68%
  2. beaver                                                                                   10.00%
  3. marmot                                                                                    3.19%

— sink —
  1. washbasin, handbasin, washbowl, lavabo, wash-hand basin                                  76.69%
  2. tub, vat                                                                                  6.02%
  3. bathtub, bathing tub, bath, tub                                                           4.03%

— koala —
  1. koala, koala bear, kangaroo bear, native bear, Phascolarctos cinereus                    99.12%
  2. wombat                                                                                    0.68%
  3. wallaby, brush kangaroo                                                                   0.01%

— toy poodle —
  1. miniature poodle                                                                         59.28%
  2. toy poodle                                                                               38.44%
  3. Maltese dog, Maltese terrier, Maltese                                                     0.71%
```

RESULTS

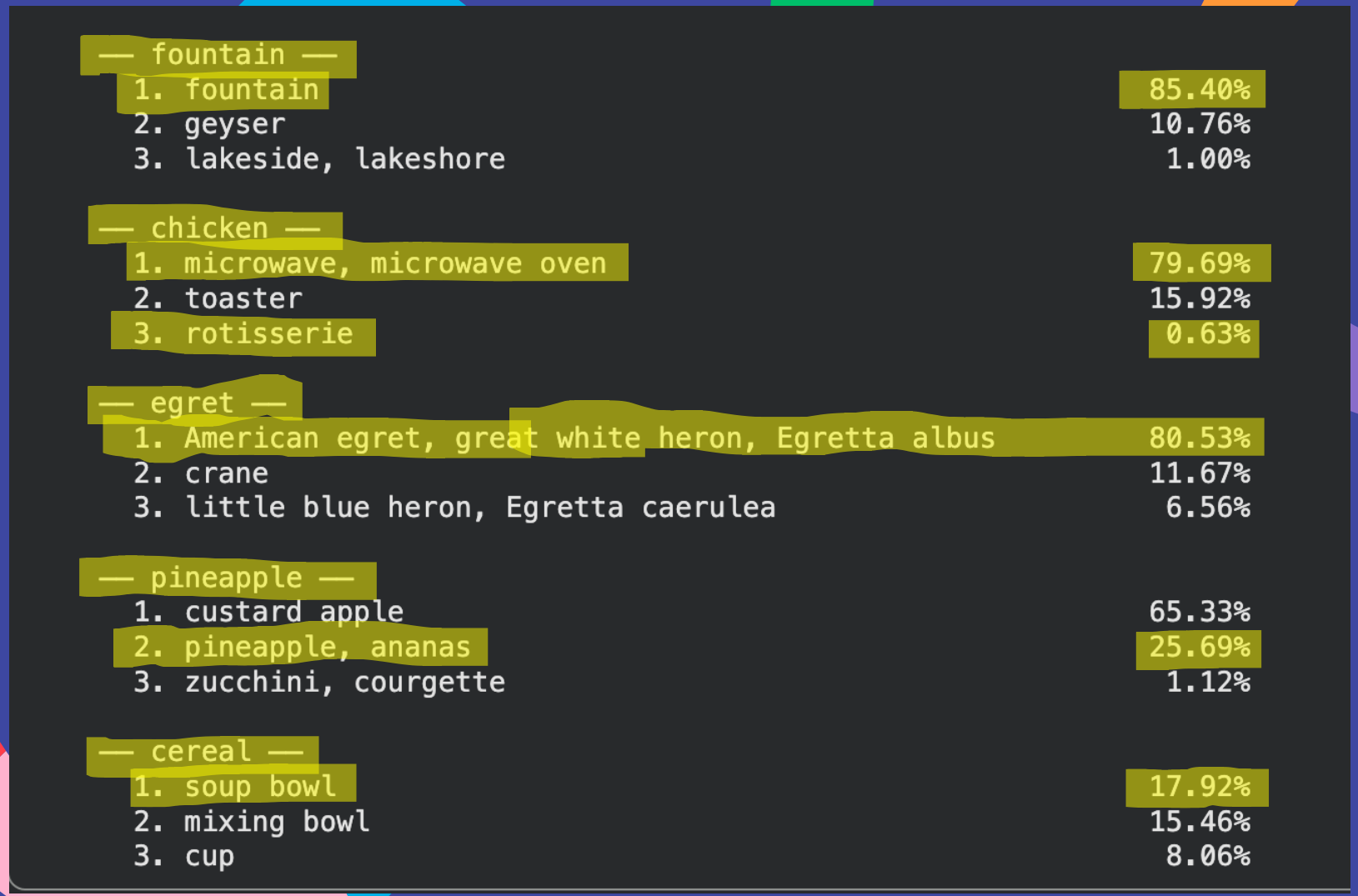
— fountain —
1. fountain 85.40%
2. geyser 10.76%
3. lakeside, lakeshore 1.00%
— chicken —
1. microwave, microwave oven 79.69%
2. toaster 15.92%
3. rotisserie 0.63%
— egret —
1. American egret, great white heron, Egretta albus 80.53%
2. crane 11.67%
3. little blue heron, Egretta caerulea 6.56%
— pineapple —
1. custard apple 65.33%
2. pineapple, ananas 25.69%
3. zucchini, courgette 1.12%
— cereal —
1. soup bowl 17.92%
2. mixing bowl 15.46%
3. cup 8.06%

RESULTS


platypus.jpeg
Layer 0
platypus.jpeg
Layer 6
Layer 11
Attention Rollout
squirrel.jpg
Layer 0
squirrel.jpg
Layer 6
Layer 11
Attention Rollout
sink.jpg
Layer 0
sink.jpg
Layer 6
Layer 11
Attention Rollout

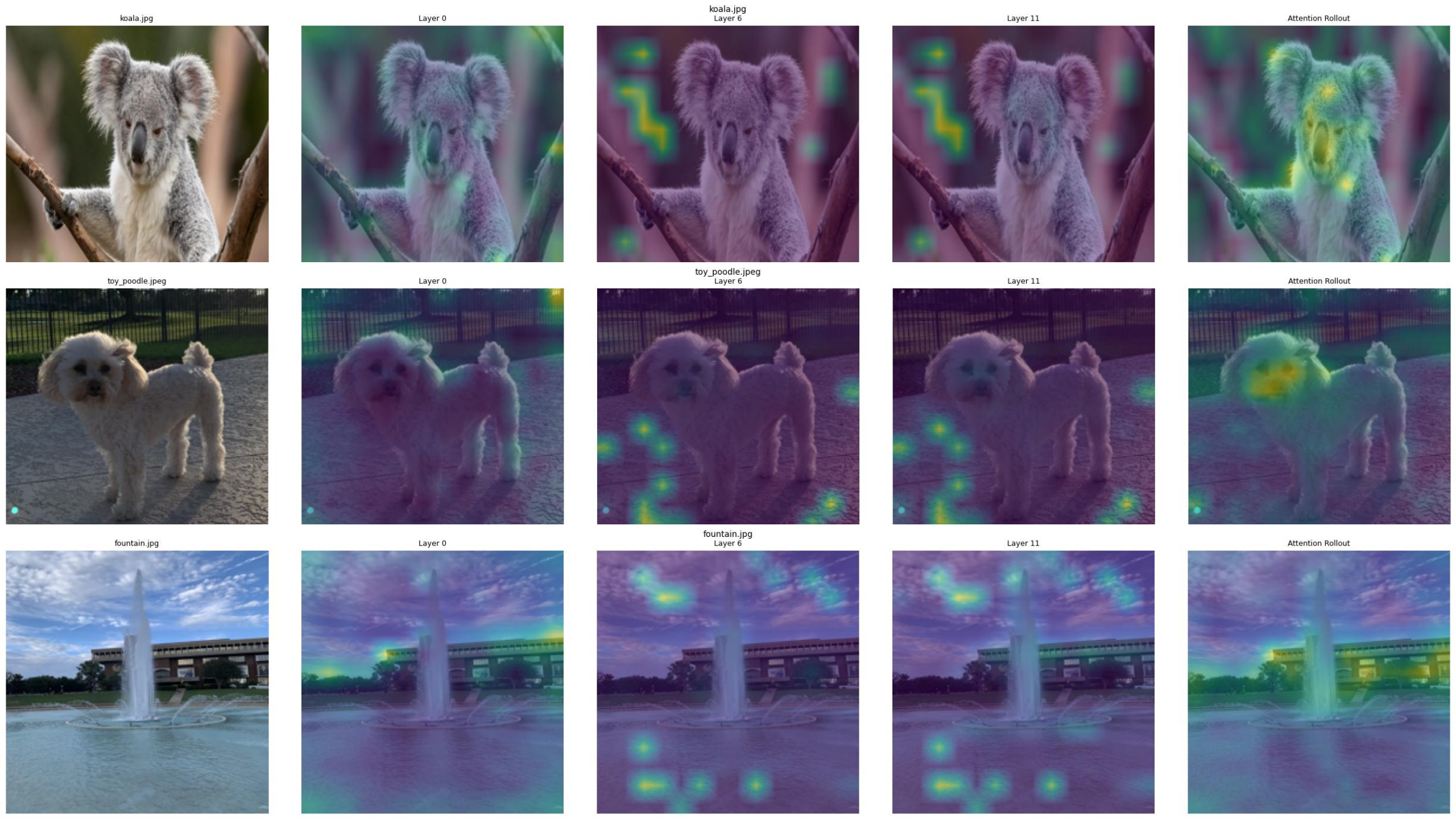
koala.jpg
Layer 0
Layer 6
Layer 11
Attention Rollout
toy_poodle.jpeg
Layer 0
Layer 6
Layer 11
Attention Rollout
fountain.jpg
Layer 0
Layer 6
Layer 11
Attention Rollout



ASSIGNMENT TWO !

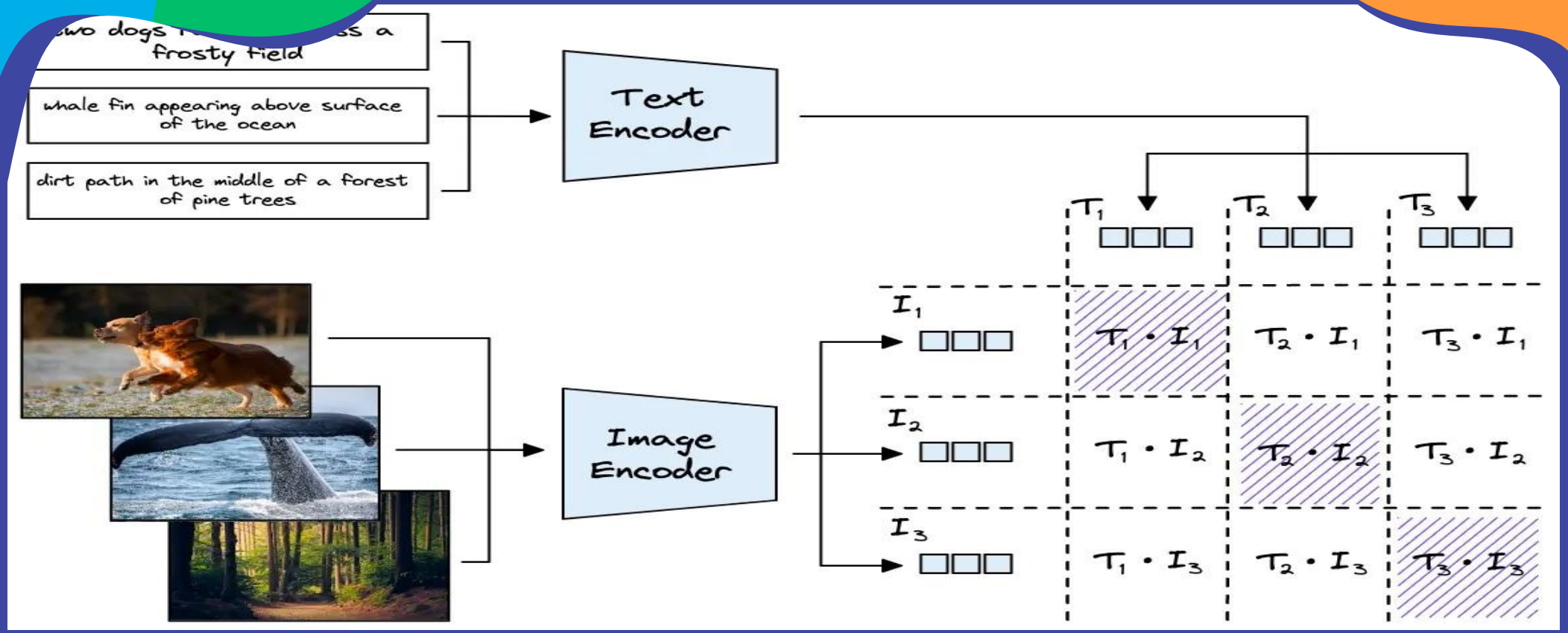
frosty field
whale fin appearing above surface of the ocean
dirt path in the middle of a forest of pine trees
Text Encoder
Image Encoder
T1
T2
T3
I1
I2
I3
T1 • I1
T2 • I1
T3 • I1
T1 • I2
T2 • I2
T3 • I2
T1 • I3
T2 • I3
T3 • I3

CLIP

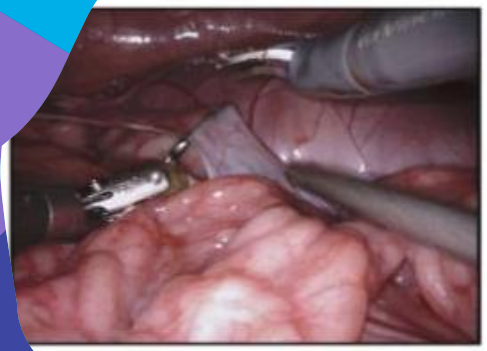

Questions

Q1: what organ is being operated?
Q2: what is the state of bipolar forceps?
Q3: what is the state of suction?
Q4: where is bipolar forceps located?
Q5: what tools are operating the organ?

Answers

A1: kidney
A2: retraction
A3: tissue manipulation
A4: bipolar forceps is located at left-top
A5: the tools operating are bipolar forceps, monopolar curved scissors, and suction

PROJECT 18

Scene-Graph Reasoning and Uncertainty Quantification for Surgical Visual Question Answering

With Dr. Laura Brattain